Reg. No. | | | | | | | | | |

Question Paper Code : 16358

B.E. / B.TECH. DEGREE EXAMINATION, NOVEMBER / DECEMBER 2020

Third Semester

B.E. – Computer Science and Engineering

19CS301 – DATA STRUCTURES AND ALGORITHMS

(Regulations: Mepco – R2019)

Duration: 3 Hours Max. : 100 Marks

Answer ALL Questions

BTL, CO

PART A – (10 × 2 = 20 Marks)

A, CO1 1. The recurrence relation capturing the optimal time of the Tower of Hanoi problem with n discs is _____. Justify your answer.

A) T(n) = 2T(n – 2) + 2 B) T(n) = 2T(n – 1) + n

C) T(n) = 2T(n/2) + 1 D) T(n) = 2T(n – 1) + 1

R, CO1 2. When will be the Big Omega notation used?

A, CO2 3. The following sequence of operations is performed on a stack:

PUSH(20), PUSH(10), POP, PUSH(20), PUSH(10), POP, POP, POP, PUSH(10), POP.

The sequence of values popped out is _____. Justify your answer.

A) 10, 20, 10, 20, 10 B) 10, 10, 20, 20, 10

C) 20, 10, 10, 20, 10 D) None of the above

R, CO2 4. Mention some of the applications of Queue data structure.

U, CO3 5. What is the use of splaying strategy in a splay tree?

A, CO3 6. Consider a binary max-heap implemented using an array. Which one of the following array represents a binary max-heap? Justify your answer.

A) 25,12,16,13,10,8,14 B) 25,16,12,13,10,8,14

C) 25,14,16,13,10,8,12 D) 25,14,12,13,10,8,16

U, CO4 7. Write a C++ class interface for Disjoint Set data structure.

A, CO4 8. Consider a hash table of size seven, with starting index zero, and a hash function (3x + 4) mod 7. Assuming the hash table is initially empty, which of the following statements are true when the sequence 1, 3, 8, 10 is inserted into the table? Justify your answer.

A) 1 and 8 hash to the same value

B) 3 and 8 hash to the same value

C) All elements hash to the same value

D) Each element hashes to a different value

U, CO5 9. Which of the following data structure is useful in traversing a given graph by depth first search? Justify your answer.

A) Stack B) Heap C) Queue D) Set

R, CO5 10. Define Euler circuit problem.

PART B – (5 × 16 = 80 Marks)

A, CO1 11. a) i. An age is stated as shown below:

ALGORITHM *Mystery(n)*

//Input: A nonnegative integer *n*

$S \leftarrow 0$

for $i \leftarrow 1$ to n do

$S \leftarrow S + i * i$

return S

Answer the following:

A) What does this algorithm compute?

B) What is its basic operation?

C) How many times is the basic operation executed?

D) What is the efficiency class of this algorithm?

E) Suggest an improvement, or a better algorithm altogether, and indicate its efficiency class. If not possible try to prove that, in fact, it cannot be improved. (10 Marks)

A, CO1 11. a) ii. Prove: If $t1(n) \in O(g1(n))$ and $t2(n) \in O(g2(n))$, then

$t1(n) + t2(n) \in O(\max\{g1(n), g2(n)\})$. (6 Marks)

OR

A, CO1 11. b) i. Design a sequential search algorithm. Explain the working of the algorithm with an example of your own. Analyze the algorithm and indicate its time efficiency class

A) in the worst case.

B) in the best case.

C) in the average case. (10 Marks)

A, CO1 11. b) ii. Solve the following recurrence:

$T(n) = 8T(n/2) + n^2$ (6 Marks)

A, CO2 12. a) i. You are given an array list, *L*, and another array list, *P*, containing integers sorted in ascending order. The operation *printLots(L,P)* will print the elements in *L* that are in positions specified by *P*. For instance, if *P* = 1, 3, 4, 6 the elements in positions 1, 3, 4, and 6 in *L* are printed. Write the procedure *printLots(L,P)*. (8 Marks)

A, CO2 12. a) ii. Illustrate with a neat diagram to perform polynomial subtraction between the following two polynomials using Linked List:

$7x^5 + 6x^2 + 2x + 4$

$9x^8 + 5x^5 + 5x^3 + 2x^2 + 8$ (8 Marks)

OR

A, CO2 12. b) i. A *deque* is a data structure consisting of a list of items on which the following operations are possible:

push(x): Insert item x on the front end of the deque.

pop(): Remove the front item from the deque and return it.

inject(x): Insert item x on the rear end of the deque.

eject(): Remove the rear item from the deque and return it.

Write routines to perform the *deque* operations. (8 Marks)

A, CO2 12. b) ii. Evaluate the postfix expression a b c d + e * + f + * using Stack, where a = 6, b = 40, c = 8, d = 5, e = 5, f = 20.

Demonstrate the steps with a neat diagram. (8 Marks)

U, CO3 13. a) i. Write an algorithm to insert a new element in an AVL tree after checking the balance property. (8 Marks)

A, CO3 13. a) ii. Draw an expression tree for the following infix expression:

((a + b) * c) + ((d * e) + (f * g)).

Can we get the prefix and postfix expressions for the given infix expression by traversing the expression tree? If so, explain. (8 Marks)

OR

U, CO3 13. b) i. Write a C++ routines to search an element in a Binary Search Tree and to perform inorder traversal. (8 Marks)

A, CO3 13. b) ii. Show the result of inserting 10, 12, 1, 14, 5, 8, 15, 3, and 2, one at a time, into an initially empty binary heap. Also show the result of performing two deleteMin operations. (8 Marks)

U, CO4 14. a) i. Explain dynamic equivalence problem. Which data structure is used to solve the problem? How it is solved? (8 Marks)

A, CO4 14. a) ii. Given input {437, 133, 613, 419, 433, 967, 198, 104} and a hash function $h_1(x) = x \bmod 10$. Show the resulting open addressing hash table with second hash function $h_2(x) = 7 - (x \bmod 7)$ for collision avoidance. (8 Marks)

OR

U, CO4 14. b) i. Explain how we insert and delete elements in separate chaining hash table with algorithm. (8 Marks)

A, CO4 14. b) ii. Given input {31, 13, 73, 99, 44, 79, 89} and a hash function $h(x) = x \bmod 10$, show the resulting

A) hash table using linear probing

B) hash table using quadratic probing (8 Marks)

A, CO5 15. a) i. Find the shortest path from *A* to all other vertices for the following graph and write the algorithm for the same.

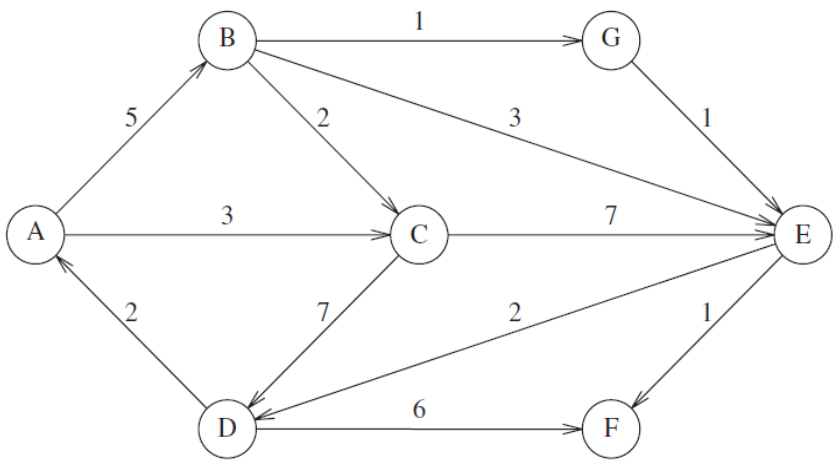

(10 Marks)

A, CO5 15. a) ii. Find a topological ordering for the graph below.

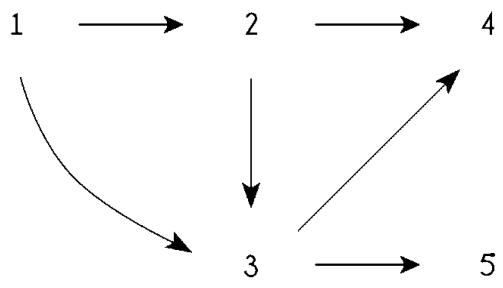

(6 Marks)

OR

A, CO5 15. b) i. Find a minimum spanning tree for the graph given below using Prim's algorithm and write the algorithm.

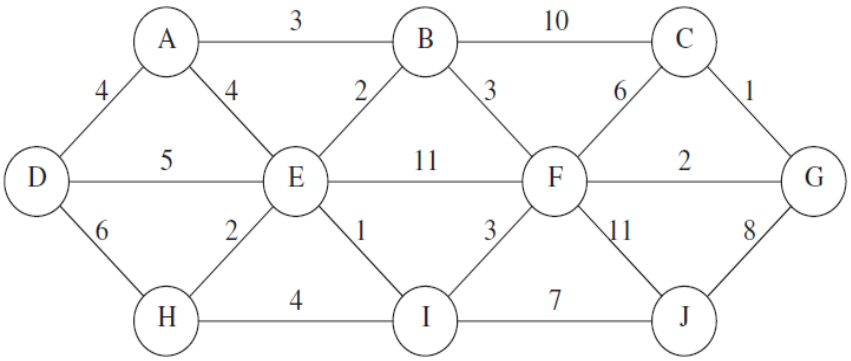

(10 Marks)

A, CO5 15. b) ii. Check whether the following graph is biconnected or not. Justify your answer.

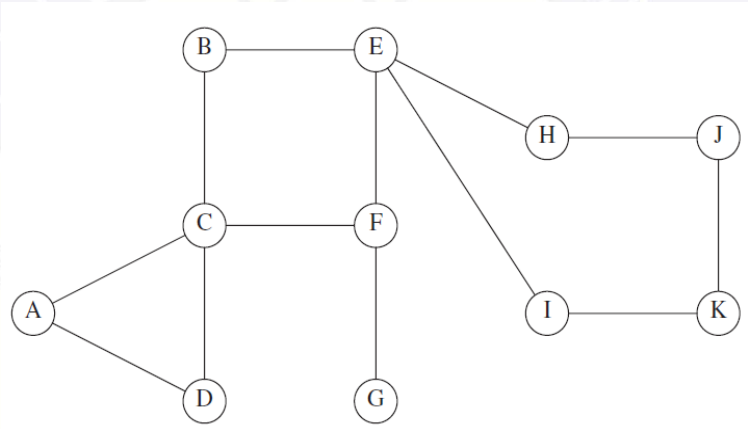

(6 Marks)